Production Size Specification **TRICORP**

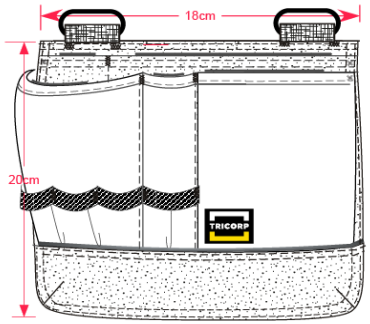

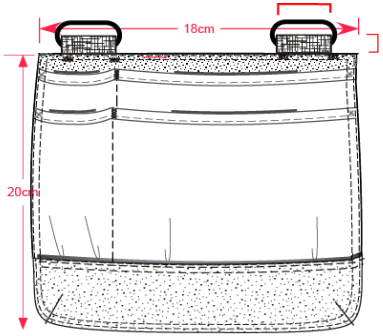

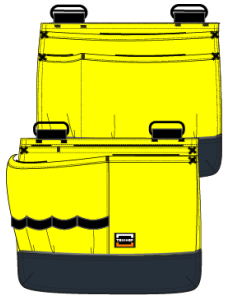

Sketch is for how to measuren NOT for style

STYLE NO	653004
STYLE DESCRIPTION	Swing Pockets High Vis Bicolor
FIT	Accessories
GENDER	Unisex
DATE	27-6-2019
VERSION	V1

		one size	Tol
14,0	Front pocket width (near WB)	18	0.3
14,1	Front pocket length (side seam)	20	0.3